
HAIR
CUTS

# History of Fire Hydrants

- Wooden Water Pipe
- As early as mid 1600's
- Fire Plug
- Cast Iron Water Pipe
- Early 1800's

# FIRE PLUG

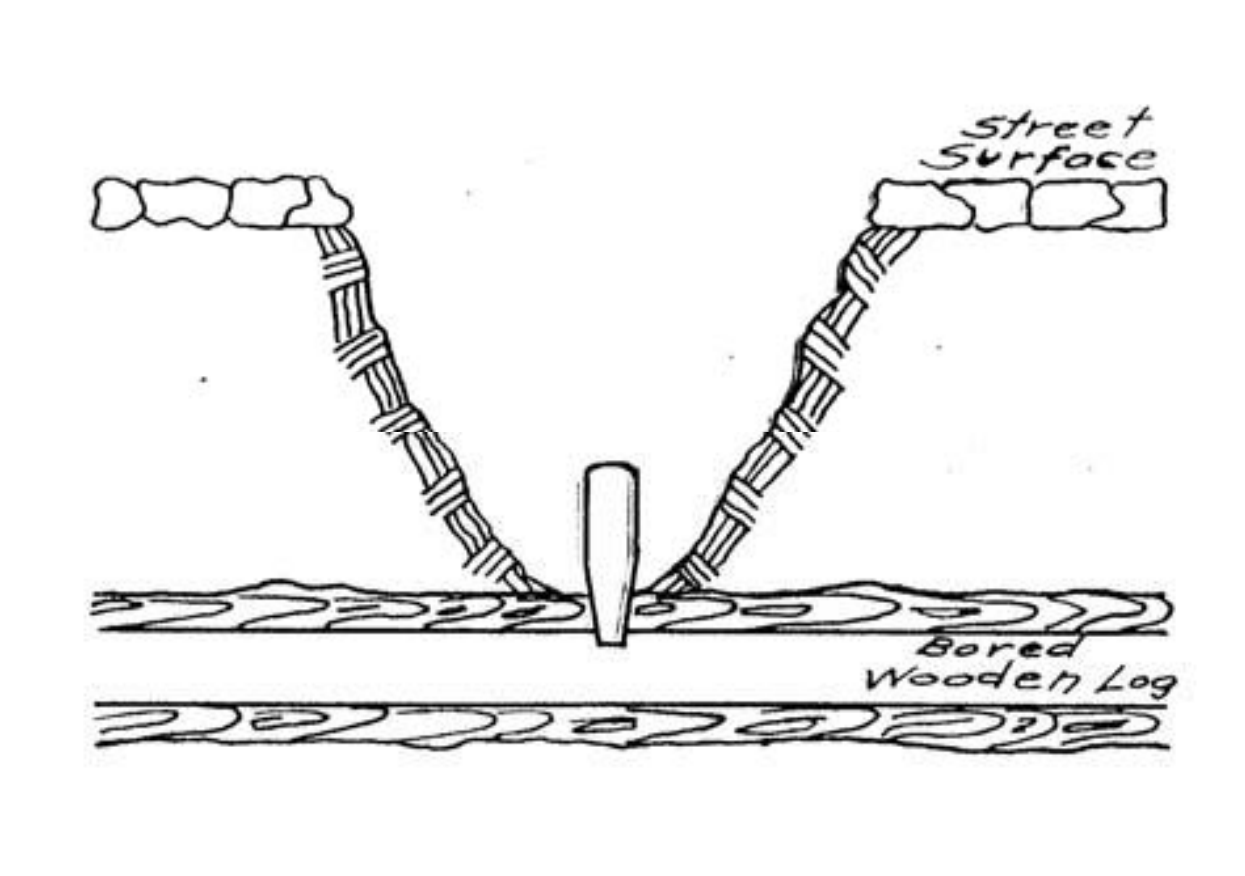

# FIRE PLUGS

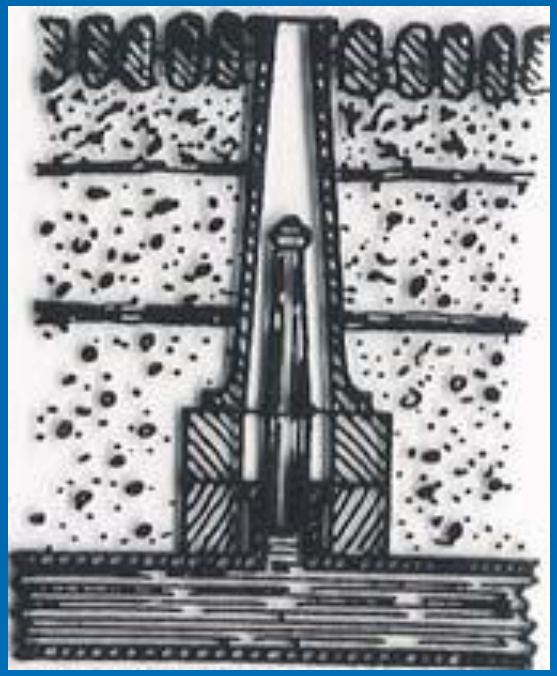

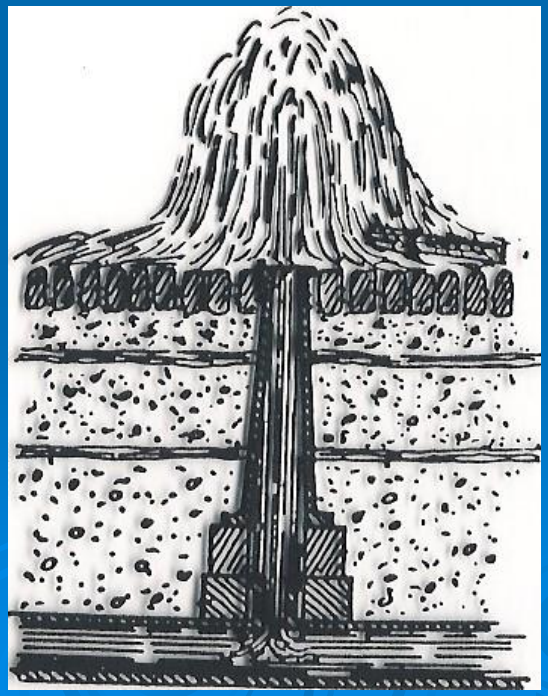

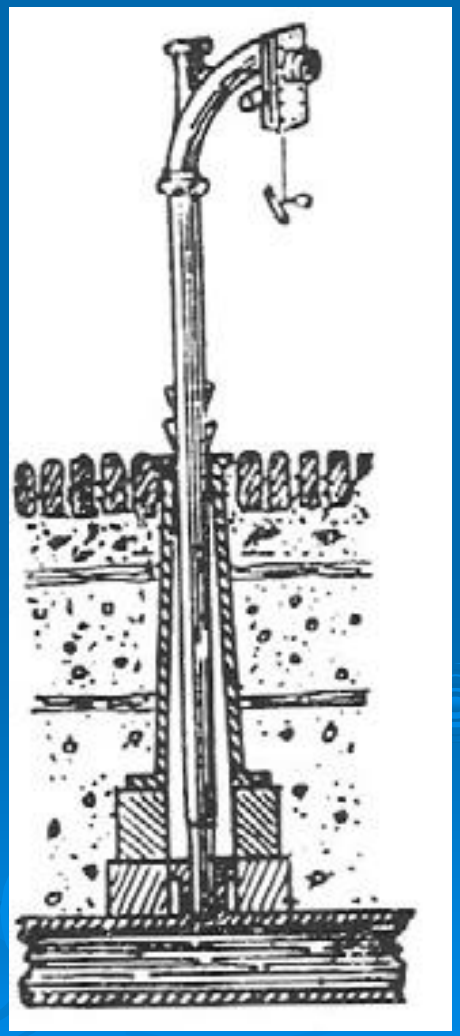

# FIRE PLUG BOX

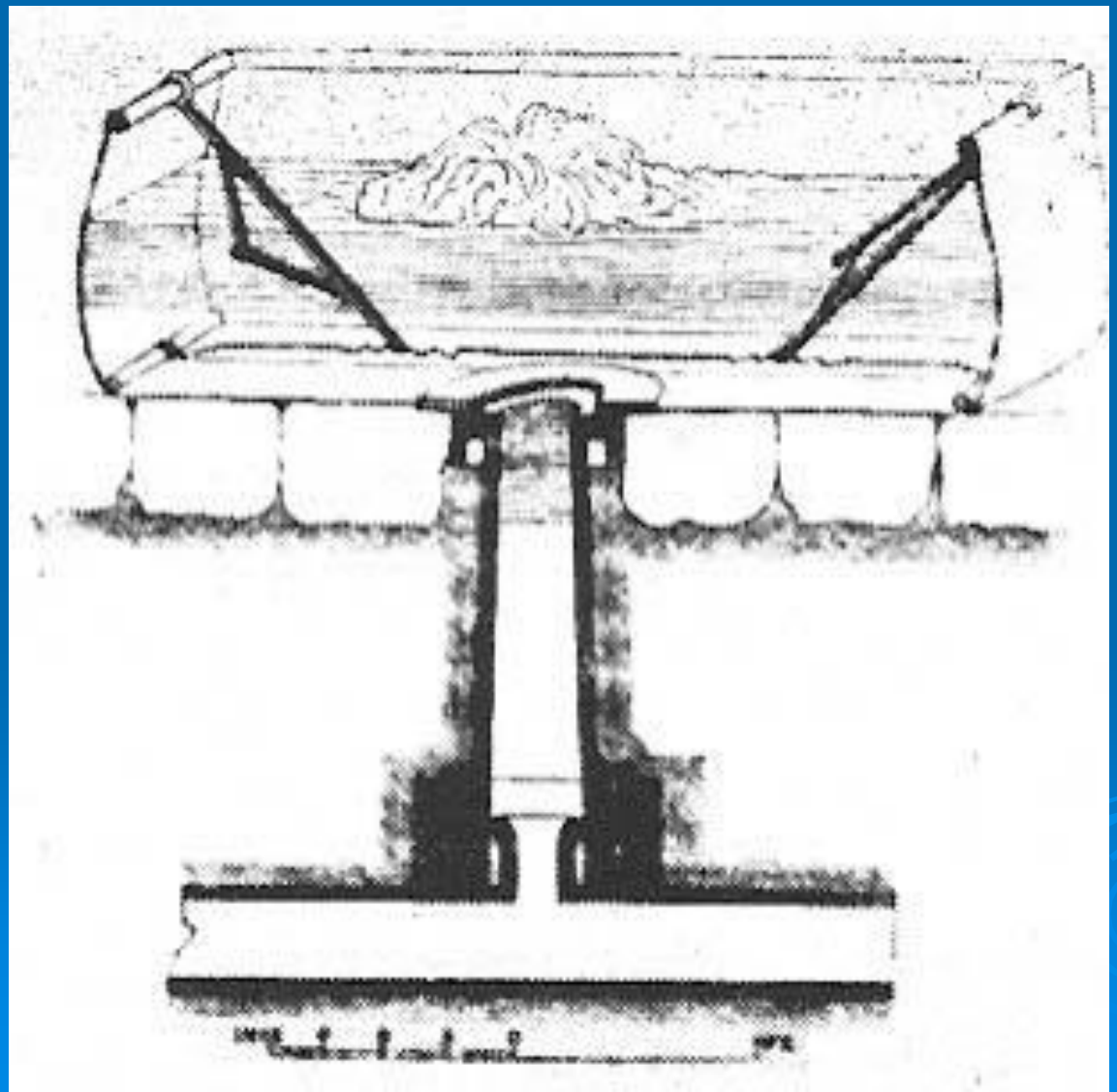

# 1800'S FIRE HYDRANT

# DEFINITIONS AND NOMENCLATURE

- AWWA C502
- Upper Barrel Components
- Lower Barrel Components
- Types of Valve Closure and Component Names
- Compression closing with the pressure
- Compression closing against the pressure
- Toggle or Scissor
- Slide-Gate

# LOWER BARREL

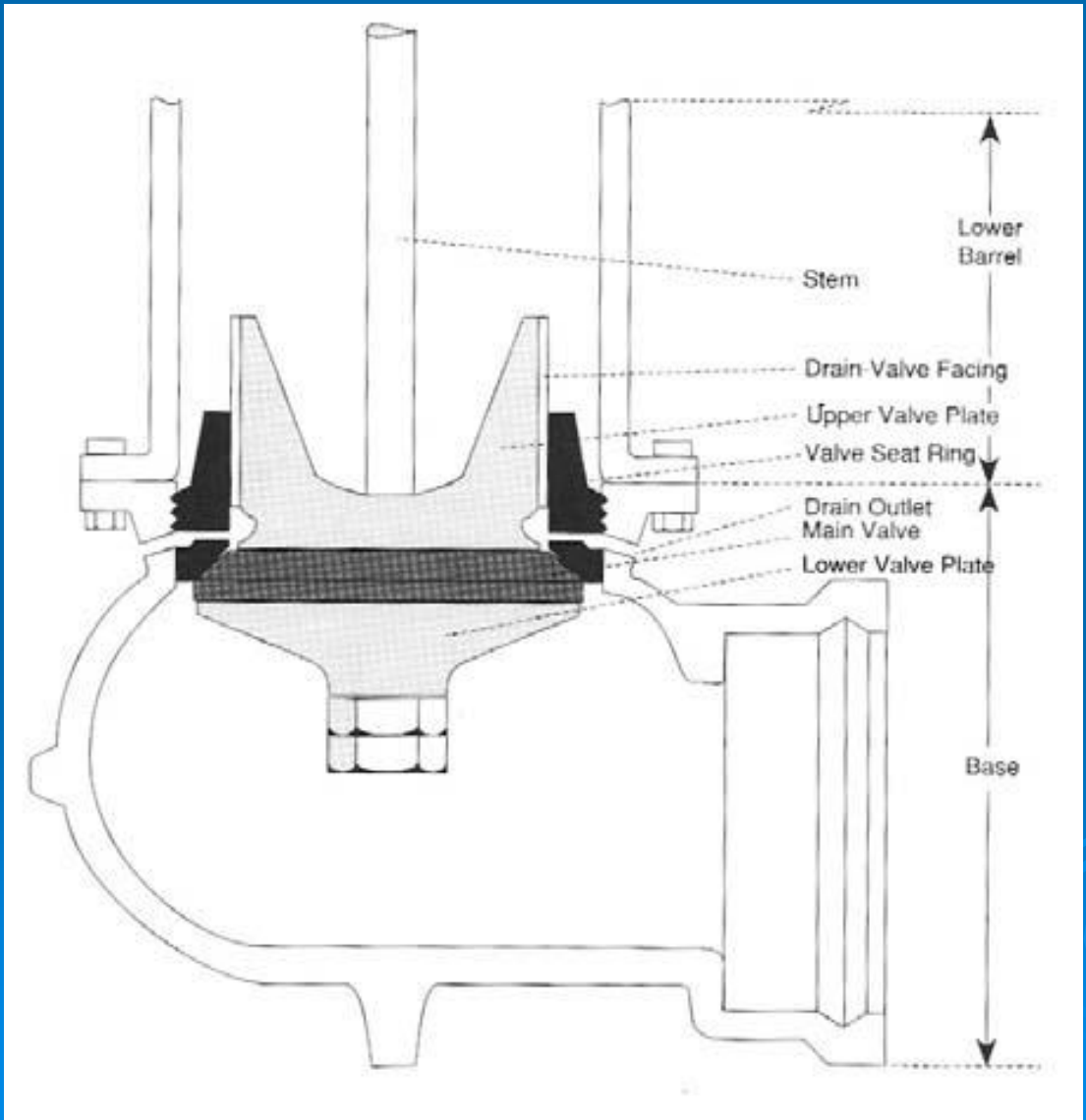

# OPEN WITH PRESSURE

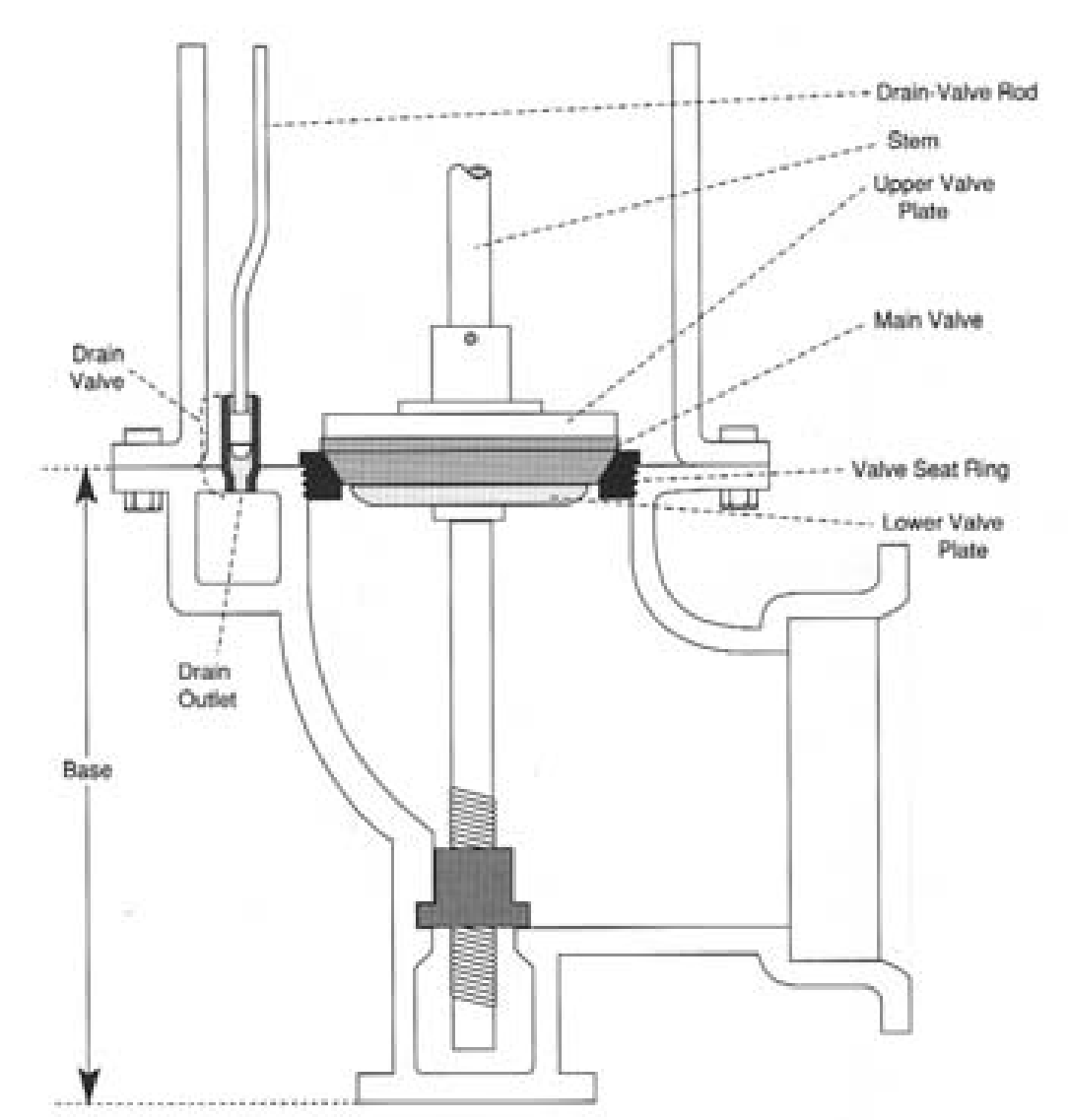

# TOGGLE TYPE

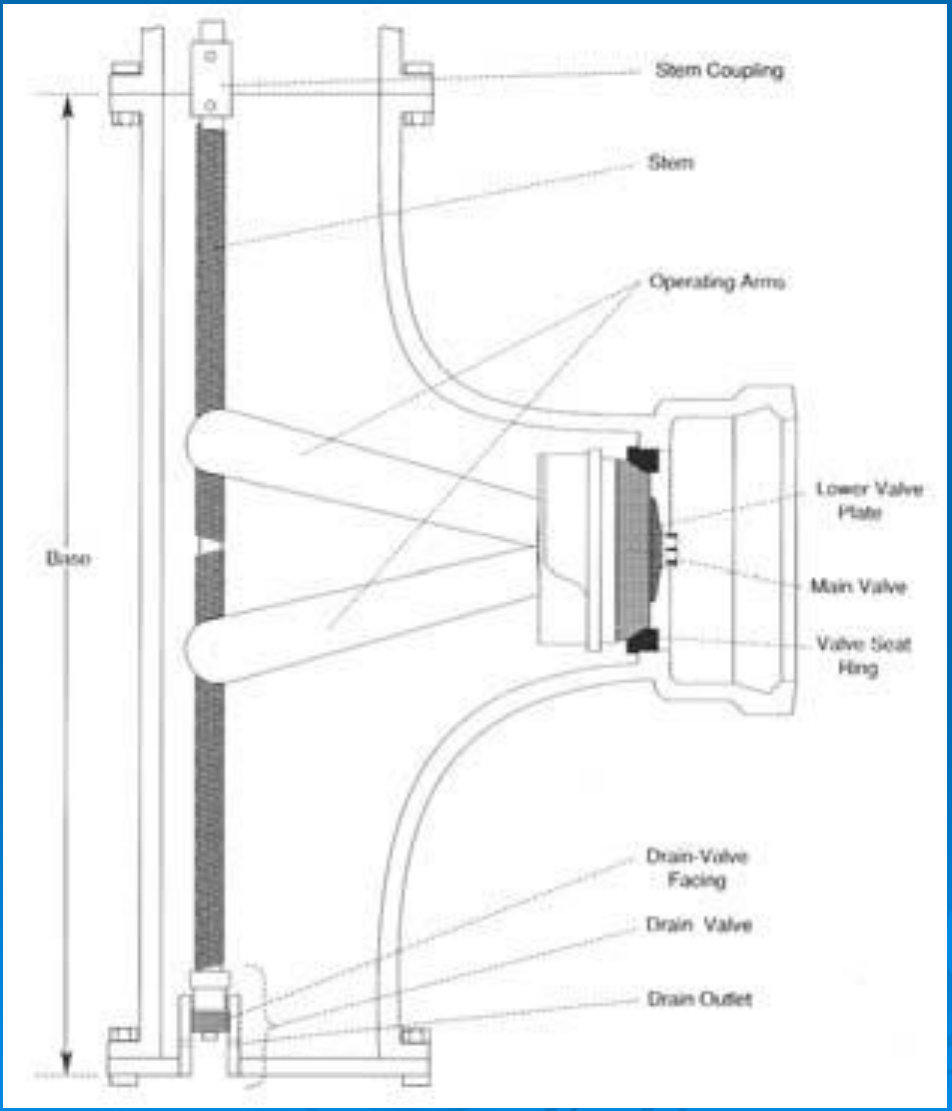
Stem Coupling
Stem
Operating Arms
Lower Valve Plate
Main Valve
Valve Seat Ring
Base
Drain-Valve Facing
Drain Valve
Drain Outlet

# IOWA HYDRANT

# COMPOSITE DRY BARREL



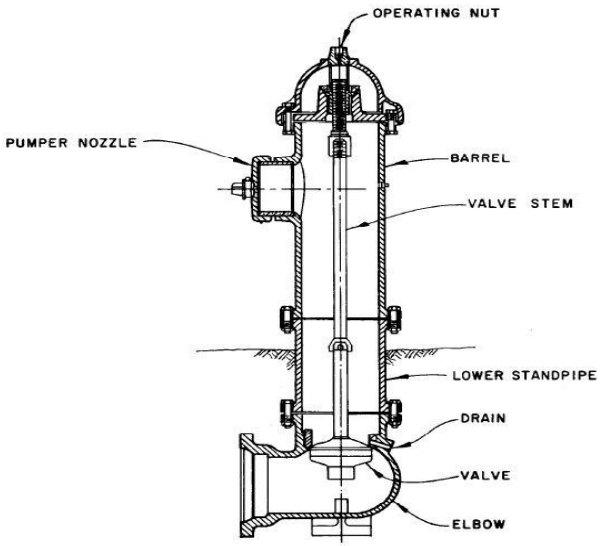


SCHEMATIC OF TYPICAL
DRY-BARREL FIRE HYDRANT

Figure 5-3. Schematic of typical dry-barrel fire hydrant.

# Clow Hydrant detailed parts assembly

## CLOW MEDALLION HYDRANT ASSEMBLY EXPLOSION

| DET. | QTY. | DESCRIPTION | MATERIAL |
|---|---|---|---|
| M-1 | 1 | OPERATING NUT O-RING | NBR |
| M-2 | 2 | OPERATING NUT THRUST BEARINGS | DELRIN |
| M-3 | 1 | OPERATING NUT | BRONZE |
| M-4 | 1 | UPPER STEM JAM NUT (OPTION) | STAINLESS STEEL |
| M-5 | 1 | UPPER STEM SLEEVE | BRONZE |
| M-6 | 1 | UPPER STEM SLEEVE O-RING | NBR |
| M-7 | 1 | UPPER STEM | CRS |
| M-8 | 1 | UPPER STEM PIN | STAINLESS STEEL |
| M-9 | 2 | SAFETY COUPLING COTTER PINS | STAINLESS STEEL |
| M-10 | 1 | SAFETY STEM COUPLING | STEEL TUBING |
| M-11 | 2 | SAFETY COUPLING PINS | STAINLESS STEEL |
| M-12 | 1 | LOWER STEM | CRS |
| M-13 | 1 | LOWER STEM PIN | STAINLESS STEEL |
| M-14 | 1 | UPPER VALVE PLATE O-RING | NBR |
| M-15 | 4 | DRAIN VALVE FACING SCREW | STAINLESS STEEL |
| M-16 | 2 | DRAIN VALVE FACING | URETHANE RUBBER |
| M-17 | 1 | UPPER VALVE PLATE | BRONZE |
| M-18 | 1 | SEAT RING UPPER O-RING | NBR |
| M-19 | 1 | SEAT RING | BRONZE |
| M-20 | 1 | SEAT RING LOWER O-RING | NBR |
| M-21 | 1 | MAIN VALVE SEAT | URETHANE RUBBER |
| M-22 | 1 | LOWER VALVE PLATE LOCKWASHER | STAINLESS STEEL |
| M-24 | 1 | LOWER VALVE PLATE | CAST IRON |
| M-25 | 1 | WEATHER CAP HOLD DOWN SCREW | ZINC PLATED STEEL |
| M-26 | 1 | WEATHER CAP | CAST IRON |
| M-27 | 1 | THRUST NUT | BRONZE |
| M-28 | 1 | THRUST NUT O-RING | NBR |
| M-29 | 4 | BONNETS, BOLTS & NUTS | ZINC PLATED STEEL |
| M-30 | 1 | BONNET | CAST IRON |
| M-31 | 2 | STEM O-RINGS | NBR |
| M-32 | 1 | BONNET O-RING | NBR |
| M-33 | 1 | NOZZLE SECTION | CAST IRON |
| M-34 | 1 | PUMPER NOZZLE LOCK | STAINLESS STEEL |
| M-35 | 1 | PUMPER NOZZLE O-RING | NBR |
| M-36 | 1 | PUMPER NOZZLE | BRONZE |
| M-37 | 1 | PUMPER NOZZLE GASKET | RUBBER |
| M-38 | 1 | PUMPER NOZZLE CAP | CAST IRON |
| M-39 | 1 | HOSE NOZZLE LOCK | STAINLESS STEEL |
| M-40 | 2 | HOSE NOZZLE O-RING | NBR |
| M-41 | 2 | HOSE NOZZLE | BRONZE |
| M-42 | 2 | HOSE NOZZLE GASKET | RUBBER |
| M-43 | 2 | HOSE NOZZLE CAP | CAST IRON |
| M-44 | 1 | CHAIN | ZINC PLATED STEEL |
| M-46 | 6 | SAFETY FLANGE BOLTS & NUTS | ZINC PLATED STEEL |
| M-47 | 2 | SAFETY FLANGE O-RINGS | NBR |
| M-48 | 1 | BARREL UPPER FLANGE | DUCTILE IRON |
| M-49 | 2 | SAFETY FLANGE | CAST IRON |
| M-50 | 1 | BARREL | DUCTILE IRON PIPE |
| M-51 | 8 | SHOE BOLTS & NUTS | ZINC PLATED STEEL |
| M-52 | 1 | BARREL LOWER FLANGE | DUCTILE IRON |
| M-53 | 1 | DRAIN RING O-RING | NBR |
| M-54 | 1 | DRAIN RING | BRONZE |
| M-57 | 1 | SHOE | DUCTILE IRON |
| M-58 | 1 | THRUST NUT SETSCREW | STAINLESS STEEL |

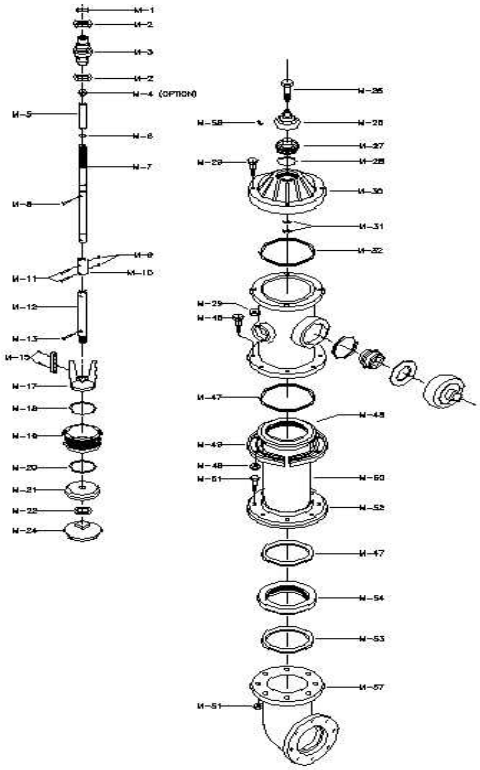

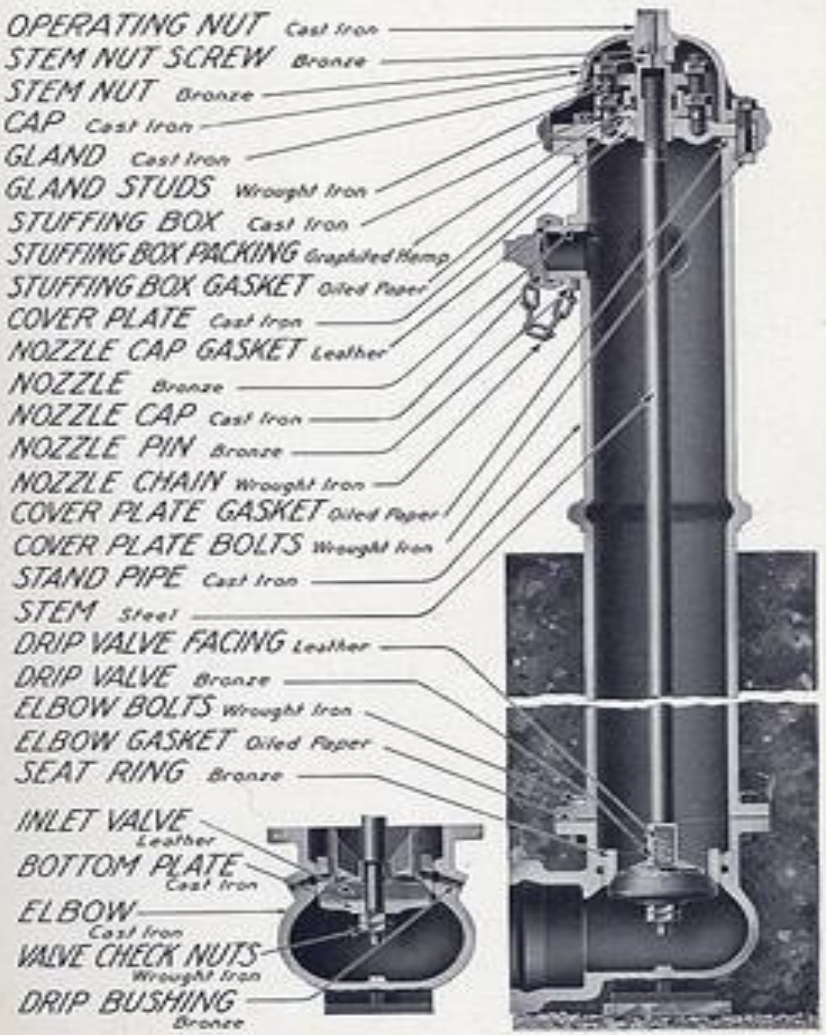


PARTS AND MATERIALS OF KENNEDY NEWTYPE FIRE HYDRANT

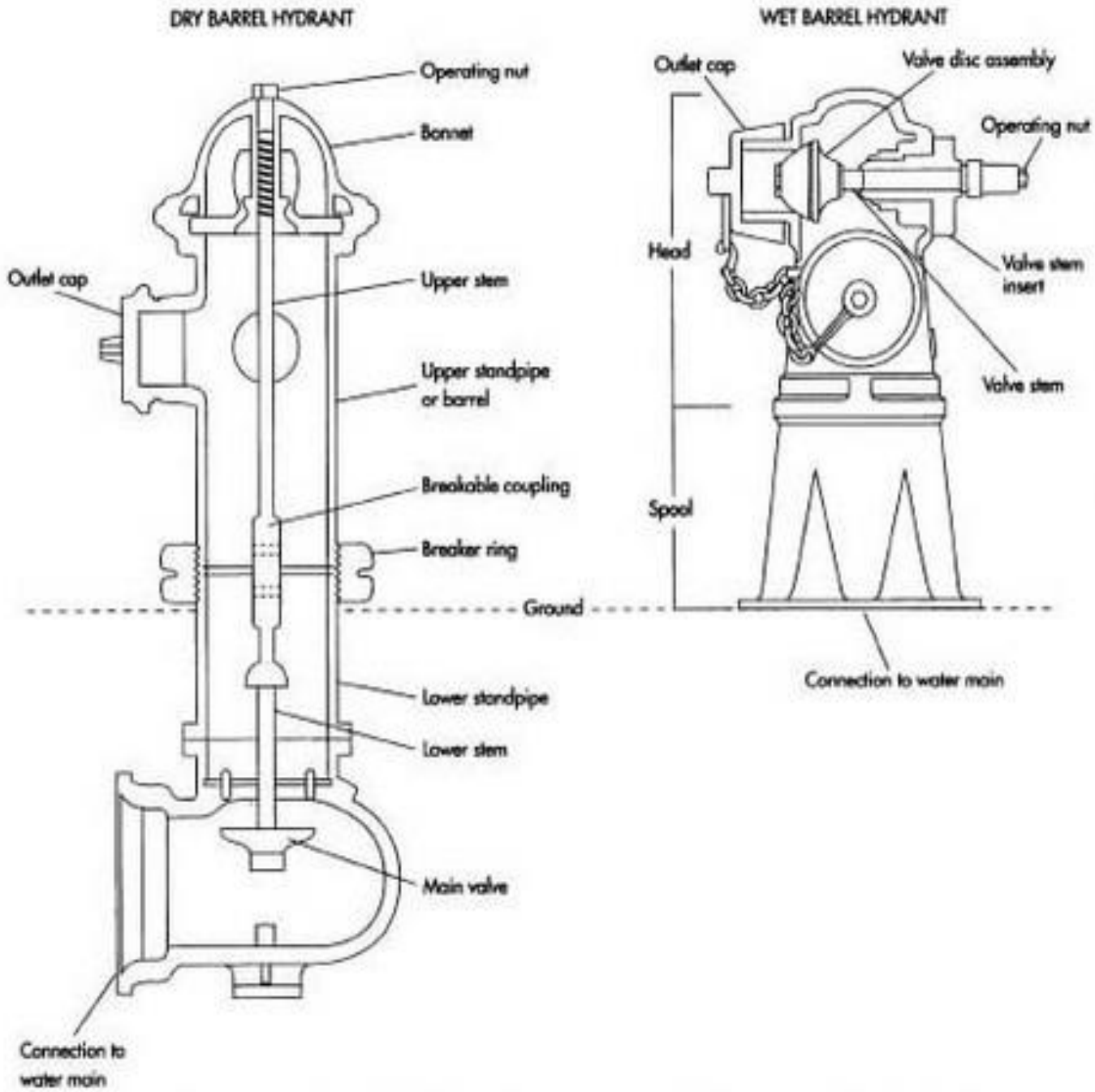
DRY BARREL HYDRANT
Operating nut
Bonnet
Outlet cap
Upper stem
Upper standpipe or barrel
Breakable coupling
Breaker ring
Ground
Lower standpipe
Lower stem
Main valve
Connection to water main
WET BARREL HYDRANT
Outlet cap
Valve disc assembly
Operating nut
Head
Valve stem insert
Valve stem
Spool
Connection to water main

# WET BARREL

# WET BARREL HYDRANTS


AVIS
FOR LEASE 408-253-1000
verizon wireless
Free Phone
FOR LEASE
408/253-1000
OAKLAND
2541
How to spot a
LOCAL.
REAL
CALIFORNIA
MILK
JASON'S AUTO SERVICE
4NDP693

# INSPECTION, INSTALLATION, TESTING AND SERVICE

# INSTALLATION

- Connect to adequate sized lines
- Install hydrants as plumb as possible
- Follow local fire codes
- Face nozzle to the street
- Make sure all nozzles are at adequate elevations


# INSTALLATION

- Install auxiliary valve
- Thrust restraints
- Provide a firm footing
- Thrust blocks – protect weep holes
- Hydrant leads should be the same as the main line
- Provide drainage
- Do not connect drainage to sewer
- Hydrant setbacks

# Typical Fire Hydrant Installation

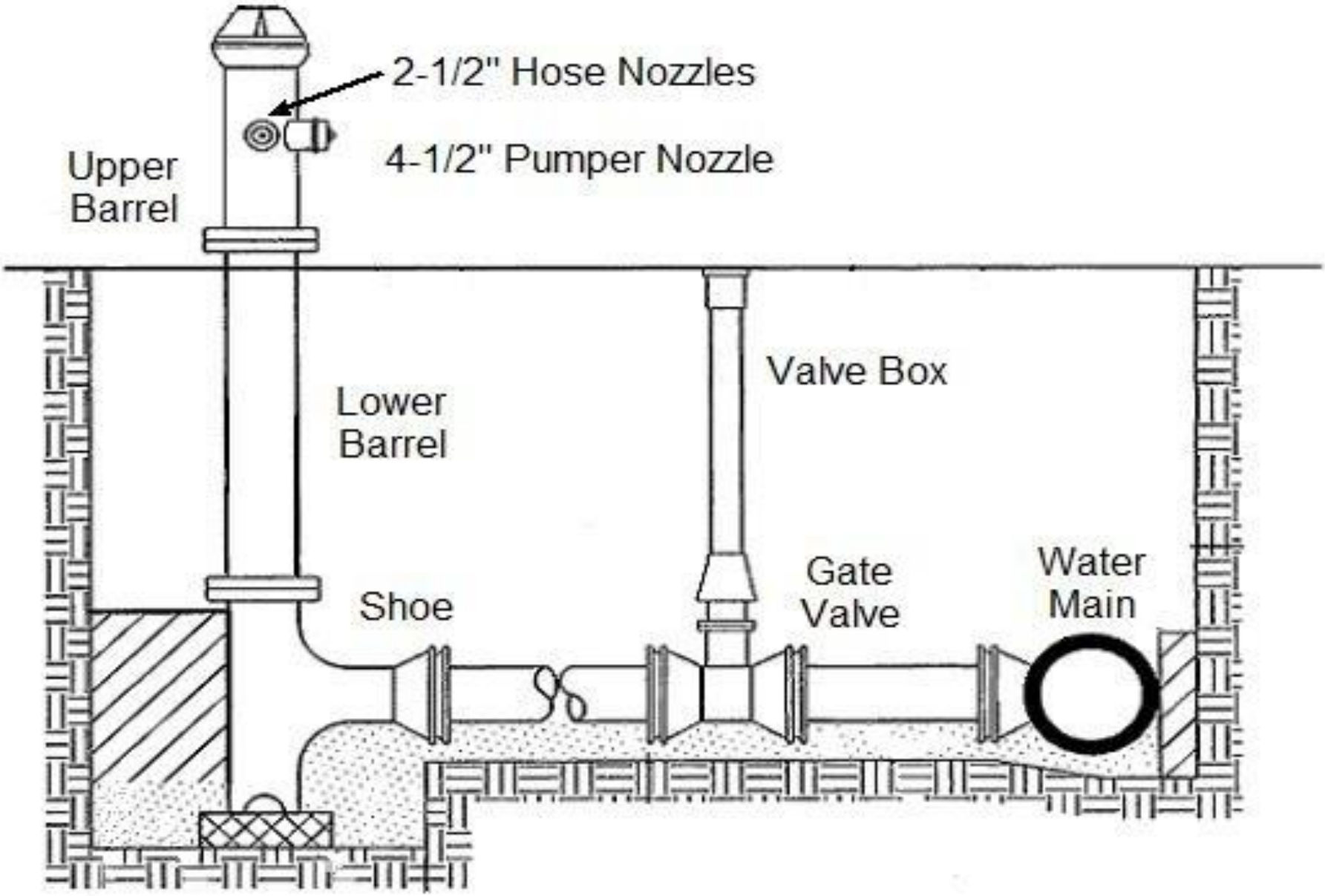

# FIRE HYDRANT DETAIL

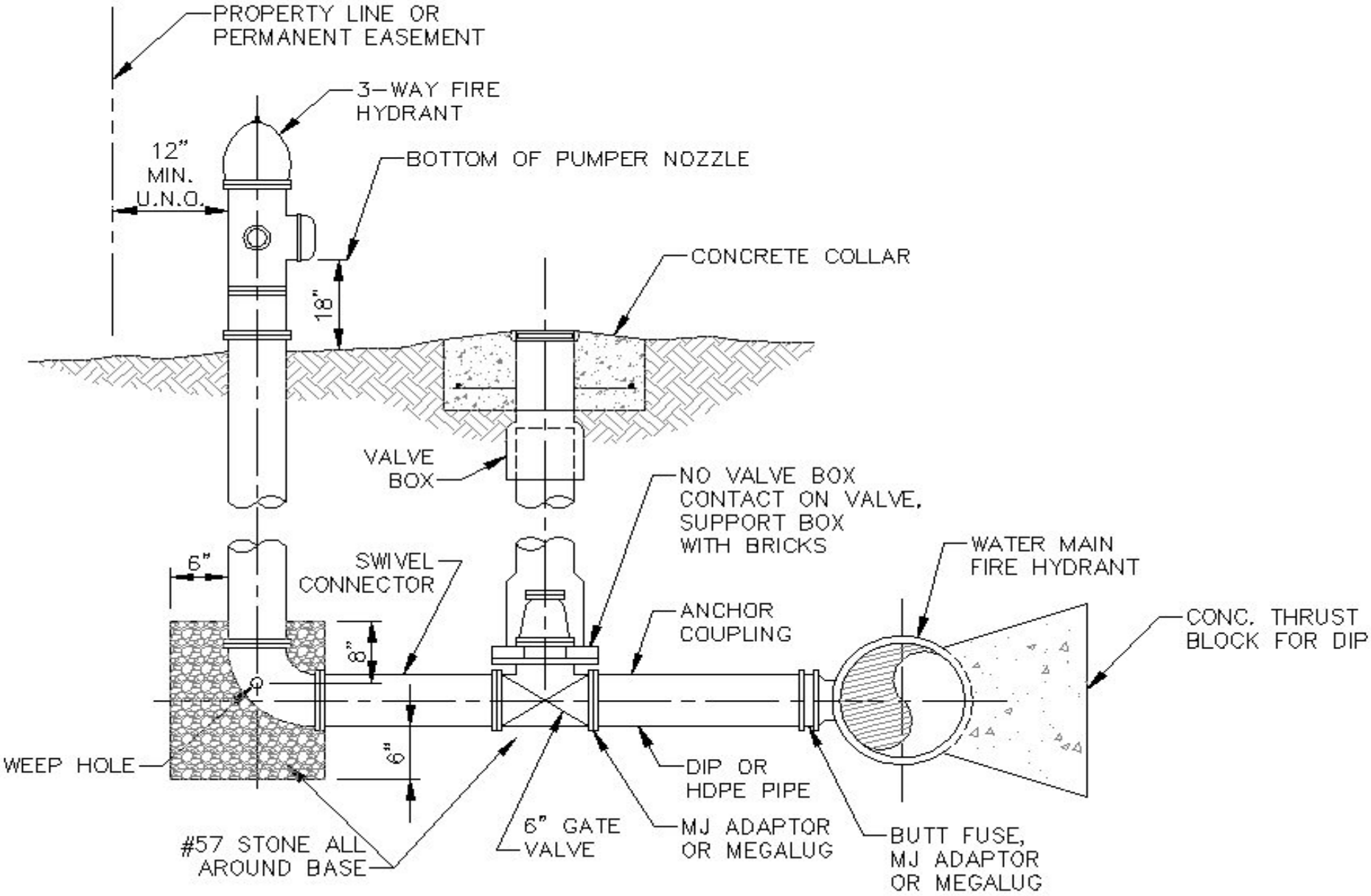


NOTE: DO NOT LOCATE IN DITCH

N.T.S.

# COLOR SHEME

- RED – 500 GALLONS OR LESS
- ORANGE 500-1000 GALLONS
- GREEN – 1000-1500 GALLONS
- BLUE – 1500 GALLONS OR MORE




# HYDRANTS SHOULD BE HIGHLY VISABLE


# INSTALLATION

- DISINFECTION
- PRESSURE TEST MAIN
- DRAINAGE TESTS
- PLACING HYDRANT IN SERVICE
  - FLUSH
  - BACTERIOLOGICAL TESTING
  - BACK OFF THE TIGHTENED CAPS
  - CLEAN THE SURROUNDINGS
  - PAINT PER YOUR STANDARDS

# MAINTENANCE

- Who's responsible?
- Hydrant uses
  - Fire suppression
  - Flushing mains
  - Street cleaning
  - Sewer cleaning
  - Construction
  - Recreation

# SPECIAL USE CONCERNS

- PARTIALLY OPENED VALVE – WATER FLOWS THROUGH DRAIN HOLES
- OPENING AND CLOSING QUICKLY
- HYDRANT WRENCH
- BACKFLOW PREVENTION
- WATER DAMAGE

# INSPECTION

- Check appearance
- Check for the presence of water in barrel
- Check for air
- Tighten cap and open hydrant to check ease of operation, leaks, and lubrication
- Partially close hydrant to flush drain outlets
- Attach diffuser or deflector and open completely
- Close listen for suction

# INSPECTION

- Remove all caps to check for thread damage and lubrication
- Lubricate per manufacturers recommendations
- Check chains
- Check breakaway components
- Locate and exercise aux. valve
- IMPORTANT: If the hydrant is inoperable indentify and notify

# LUBRICATION

- Lubrication should be NSF approved
- NO WD40 or Crisco oil



- Grease should not be water soluble

# REPAIRS

- Inventory parts needed
- Traffic precautions
- Close aux. valve
- Disassemble hydrant per manufacturers recommendations
- Replace needed parts and always replace gaskets, packing and seals
- Reassemble and test
- Vent air
- Record repair and notify fire department

# RECORD KEEPING

- Choose a form/forms
- Record location, make, type , size and installation date
- Record hydrant condition
- Note any recent repairs
- Inspection frequency
- Hydrant diagram
- Flow test reports

# FIRE FLOW TESTING


# FLOW TESTS

- Flow Hydrants – hydrant which flows are measured
- Pitot Pressure – pressure obtained from a pitot tube
- Pitot tube – instrument that measures flow
- Residual pressure – pressure that exists in the distribution system at the time of flows
- Static pressure – pressure at a given point under normal conditions

# PERSONNEL AND EQUIPMENT

- Pitot tube with pressure gauge
- Nozzle cap with pressure gauge
- A ruler
- Hydrant wrench
- Diffuser
- Person at residual hydrant
- Person at flowing hydrant
- Clipboards

# OFFICE PLANNING

- Review the maps
- Review any previous tests
- Select a day for testing
  - Traffic
  - Weather
  - Notifications
  - personnel

# FIELD PROCEDURES

- Make provisions (traffic and drainage)
- Residual Hydrant
  - Flush hydrant
  - Install gauge
  - Open main valve to vent air – close vent
  - Read static pressure on gauge

# FIELD PROCEDURES

- Locate the flow hydrant(s)
  - Measure and record the ID of the outlet nozzle
  - Determine nozzle coefficients
- Conduct the flow Tests
  - Position operators at flowing hydrant (H1) and residual hydrant (H2)
  - Fully open hydrant (H1) – slowly
  - Stabilize pressure at residual hydrant
  - Read both H1 and H2 simultaneously
  - Record the readings at for both hydrants

# FLOW TEST CALCULATIONS

$$Qr = Qf \times \frac{hr\ (0.54)}{hf\ (0.54)}$$

- Qr = available flow in GPM
- Qf = sum of flows in GPM
- hr = difference in pressure between static and desired PSI (20)
- hf = difference in pressure between static and residual PSI (actual)

# STUDY QUESTION 41

**IS IT STANDARD TO INSTALL FIRE HYDRANTS ON MAINS WITH DIAMETERS OF _____ OR LARGER**

a. 6 IN.
b. 8 IN.
c. 10 IN.
d. 12 IN.

# STUDY QUESTION 42

**MOST WATER SYSTEMS USE HYDRANTS WITH TWO ____ DIAMETER NOZZLES AND ONE ____ DIAMETER NOZZLE**

a. 2.0 IN; 3.0 IN
b. 2.0 IN; 4.0 IN
c. 2.5 IN; 3.5 IN
d. 2.5 IN; 4.5 IN

# STUDY QUESTION 43

**MISCELLANEOUS USE OF FIRE HYDRANTS**

a. IS NEVER AUTHORIZED
b. IS AT THE PUBLIC'S DISCRETION
c. IS GENERALLY DISCOURAGED BUT MAY BE AUTHORIZED
d. IS A USEFUL WAY OF TESTING HYDRANTS INDIRECTLY

# STUDY QUESTION 44

**WHICH OF THE FOLLOWING IS NOT A COMMON CLASSIFICATION OF HYDRANTS?**

a. FLOW HYDRANT
b. WARM-CLIMATE HYDRANT
c. WET BARREL HYDRANT
d. DRY BARREL HYDRANT

# STUDY QUESTION 45

THE LOWER BARREL SHOULD BE BURIED IN THE GROUND SO THAT THE CONNECTION TO THE UPPER BARREL IS APPROX. _____ ABOVE THE GROUND LINE

a. 12 IN.
b. 1 IN.
c. 6 IN.
d. 2 IN.

# QUESTIONS

- WHAT TYPE OF FH IS USED IN FREEZING CONDITIONS?
- WHAT IS AN AUXILIARY VALVE USED FOR?
- WHY IA A FH OPERATING NUT 5 SIDED
- IN A STANDARD HYDRAN COLOR SCHEME WHAT IS MEANT BY A RED BONNET? AND A BLUE BONNET?